X-Base Single-Base Table Assembly - Cone Mounted

Reference Number: 6TD00036

HARDWARE LIST					
(A) 6TD40151 SCR,FLP,1/4-20X2	(B) 6TD4010201 SCR,T-F,FL,1/4-20X5/8	(C) 5134102 SCR,FLP,#14X1-1/4	(D) 6TD40036 GLIDE	(E) 6TD40117B CASTER W/ BRAKE	(F) 6TD40117N CASTER
(G) 6TD4000801 TOP MOUNT (CONE)	(H) 6TD40052XX LEG	(J) 6TD4001501 - 29" FOOT 6TD4001502 - 35" FOOT	(K) 6TD40033 GLIDE PAD		

Tools Needed

Drill gun

1. Assembly of X-Base

(see Fig. 1)

1.1 Align the glide pad, item (K), to the one end of foot, item (J), and secure into place using 2 (B) screws.

Repeat for all 4 ends.

1.2 Align the foot, item (J), to the one end of leg, item (H), and secure into place using 4 (A) screws.

1.3 Assemble the glide or caster, item (D), (E), or (F), into the threaded hole of the foot, item (J).

1.4 Reorient the leg assembly so that the glide pad is facing downwards and the open end is facing up.

1.5 Align the top mount, item (G), to the open end of the leg assembly and secure into place using 4 (A) screws.

Note: Please see Fig. 1A for fastening sequence. Ensure all screws are fully seated.

2. Installation of Assembled X-Base with Worksurface

(see Fig. 2)

2.1 Lay worksurface upside down on a soft non scratching surface, soft square worksurface shown for example.

2.2 Center and align assembled leg over the provided pilot holes and attach using 8 (C) screws.

Note: Be sure to not over tighten screws into worksurface. Overtightening the screw can cause the hole to strip.

Fig. 1

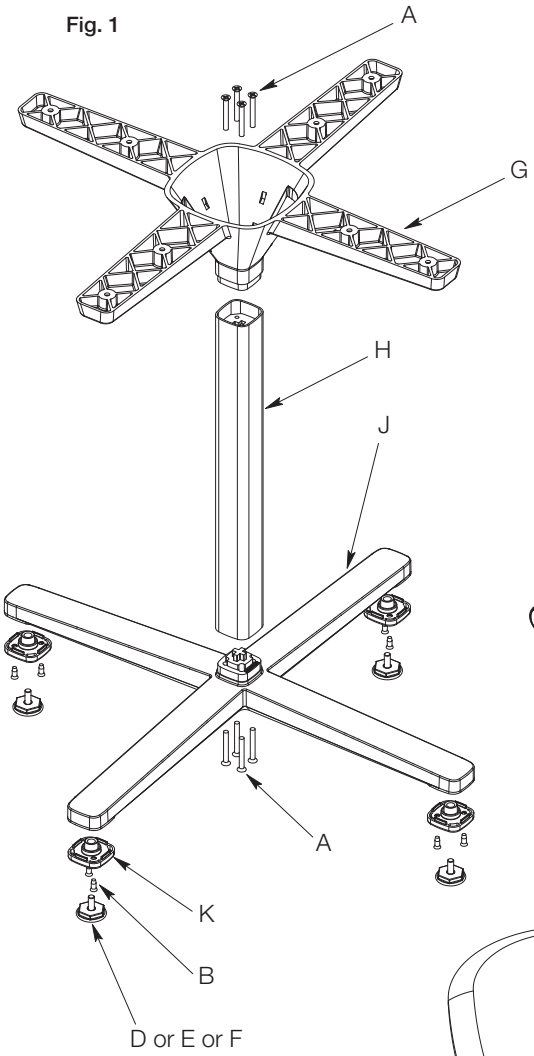

Fig. 1A

Fastening sequence

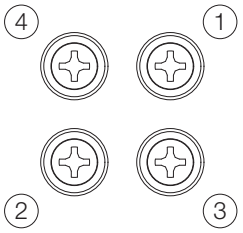
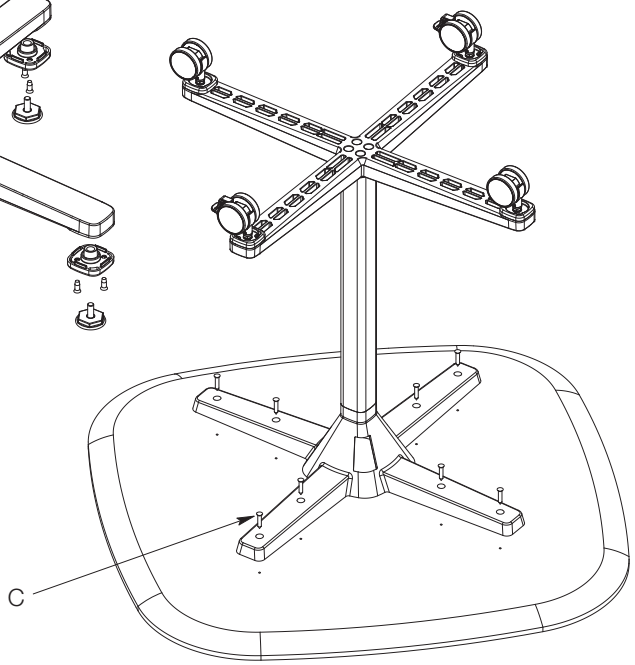
Fig. 2