X-Base Single-Base Table Assembly - Plate Mounted

Reference Number: 6TD00038

HARDWARE LIST					
(A) 6TD40151 SCR,FLP,1/4-20X2	(B) 6TD4010201 SCR,T-F,FL,1/4-20X5/8	(C) 5122218 SCR,TRP,#14X7/8	(D) 6TD40036 GLIDE	(E) 6TD40117B CASTER W/ BRAKE	(F) 6TD40117N CASTER
(G) 6TD40033 GLIDE PAD	(H) 6TD40152XX LEG	(J) 6TD4001501 - 29" FOOT 6TD4001502 - 35" FOOT			

Tools Needed

Drill gun

1. Assembly of X-Base

(see Fig. 1)

1.1 Align the glide pad, item (G), to the one end of foot, item (J), and secure into place using 2 (B) screws.

Repeat for all 4 ends.

1.2 Assemble the glide or caster, item (D), (E), or (F), into the threaded hole of the foot, item (J).

1.3 Align the foot, item (J), to the open end of leg, item (H), and secure into place using 4 (A) screws.

Note: Please see Fig. 1A for fastening sequence. Ensure all screws are fully seated.

2. Installation of Assembled X-Base with Worksurface

(see Fig. 2)

2.1 Lay worksurface upside down on a soft non scratching surface, soft square worksurface shown for example.

2.2 Center and align assembled leg over the provided pilot holes and attach using 8 (C) screws.

Note: Be sure to not over tighten screws into worksurface. Overtightening the screw can cause the hole to strip.

Fig. 1

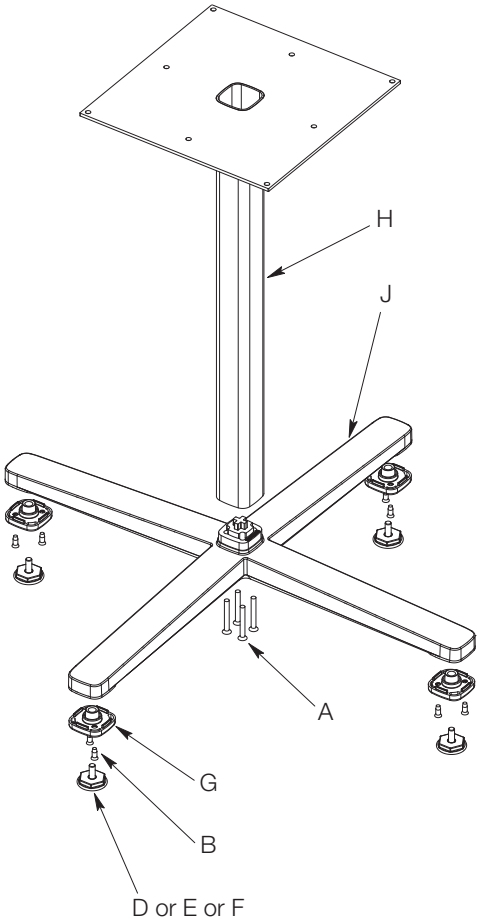

Fig. 1A

Fastening sequence

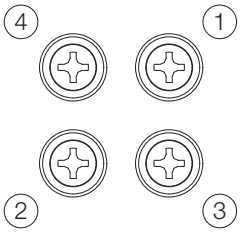
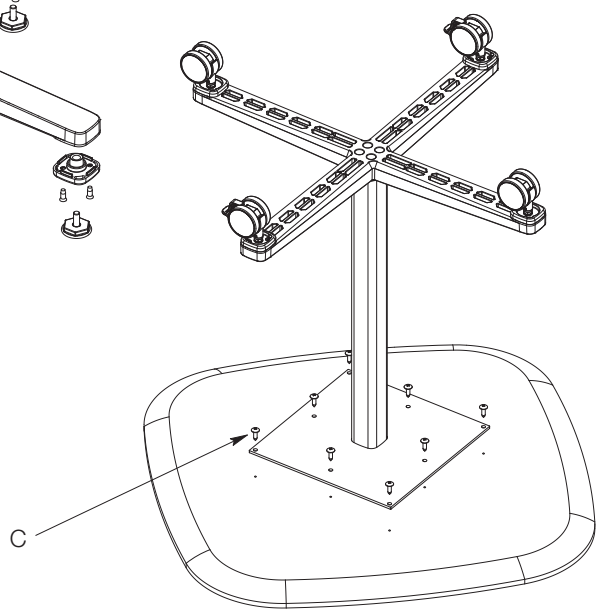
Fig. 2