# X-Base Conference Table Assembly - Multi-Piece Top

*Reference Number: 6TD00033*

HARDWARE LIST

| | | | | | |
|---|---|---|---|---|---|
| (A) 6TD40151 SCR,FLP,1/4-20X2 | (B) 6TD4010201 SCR,T-F,FL,1/4-20X5/8 | (C) 5134102 SCR,FLP,#14X1-1/4 | (D) 5118113 SCR,FLP #10X7/8 | (E) 5122218 SCR,TRP#14X7/8 | (F) 6TD40036 GLIDE |
| (G) 6TD4000801 TOP MOUNT (CONE) | (H) 6TD40052XX LEG | (J) 6TD4001501 - 29" FOOT 6TD4001502 - 35" FOOT | (K) 6TD40033 GLIDE PAD | | |
| (L) 1B53307XX STIFFENER | (M) 3TA403001 ZIP BOLT | (N) 3TA403101 WOOD BISCUIT | (P) 5340410 MEND PLATE | | |

**Tools Needed**

Drill gun

## 1. Assembly of X-Base

(see Fig. 1 and Fig. 1A)

1.1 Align the glide pad, item (K), to the one end of foot, item (J), and secure into place using 2 (B) screws.

Repeat for all 4 ends.

1.2 Align the foot, item (J), to the one end of leg, item (H), and secure into place using 4 (A) screws. (see Fig. 1A)

1.3 Assemble the glide, item (F), into the threaded hole of the foot, item (J).

1.4 Reorient the leg assembly so that the glide pad is facing downwards and the open end is facing up.

1.5 Align the top mount, item (G), to the open end of the leg assembly and secure into place using 4 (A) screws.

**Note:** Please see Fig. 1A for fastening sequence. Ensure all screws are fully seated.

1.6 Repeat for all bases.

**Fig. 1**

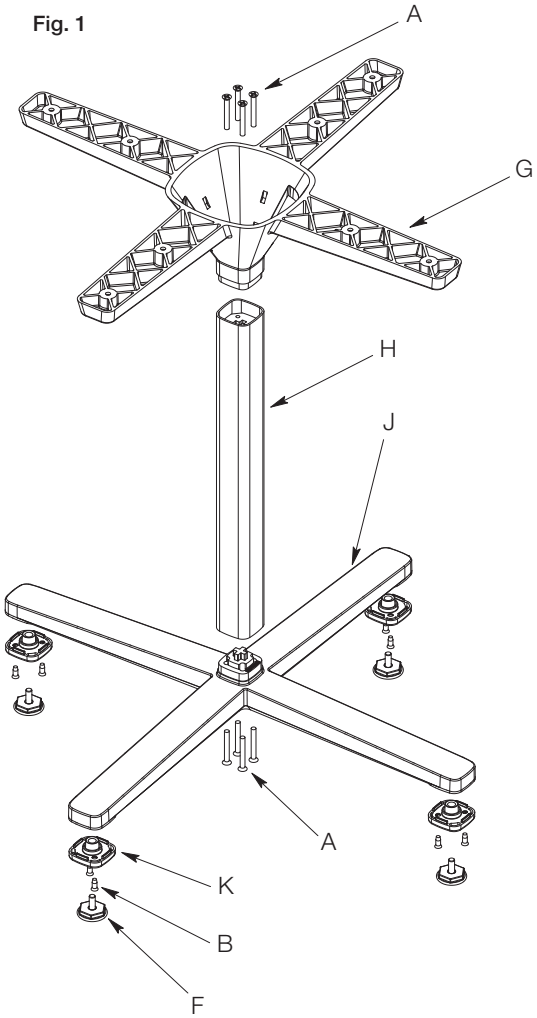


**Fig. 1A**

Fastening sequence

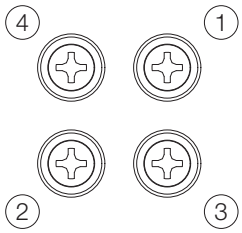

# X-Base Conference Tables Assembly - Multi-Piece Top

*Reference Number: 6TD00033*

Fig. 2

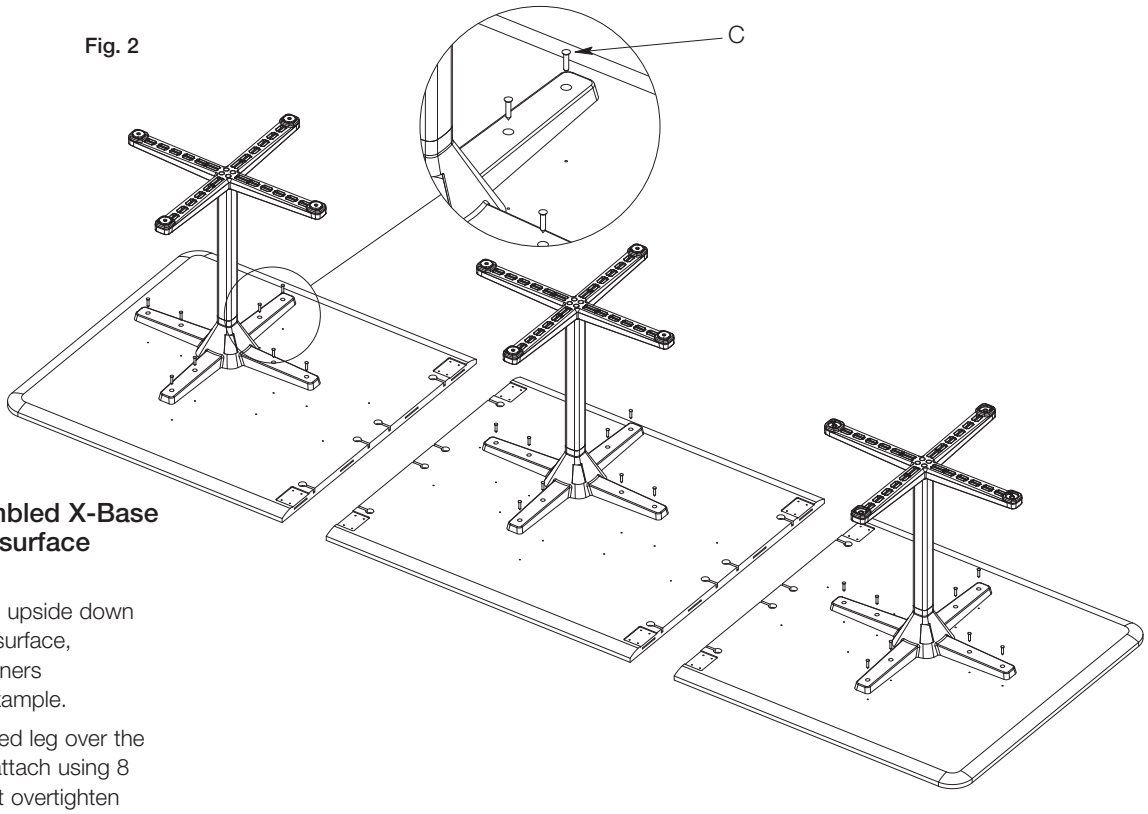


## 2. Installation of Assembled X-Base with Individual Worksurface

(see Fig. 2)

2.1 Lay left hand worksurface upside down on a soft non scratching surface, rectilinear with curved corners worksurface shown for example.

2.2 Center and align assembled leg over the provided pilot holes and attach using 8 (C) screws. Be sure to not overtighten screws into worksurface, overtightening the screw can cause the hole to strip.

2.3 Repeat steps 2.1 and 2.2 for the installation of base on middle and right hand worksurfaces.

Fig. 3

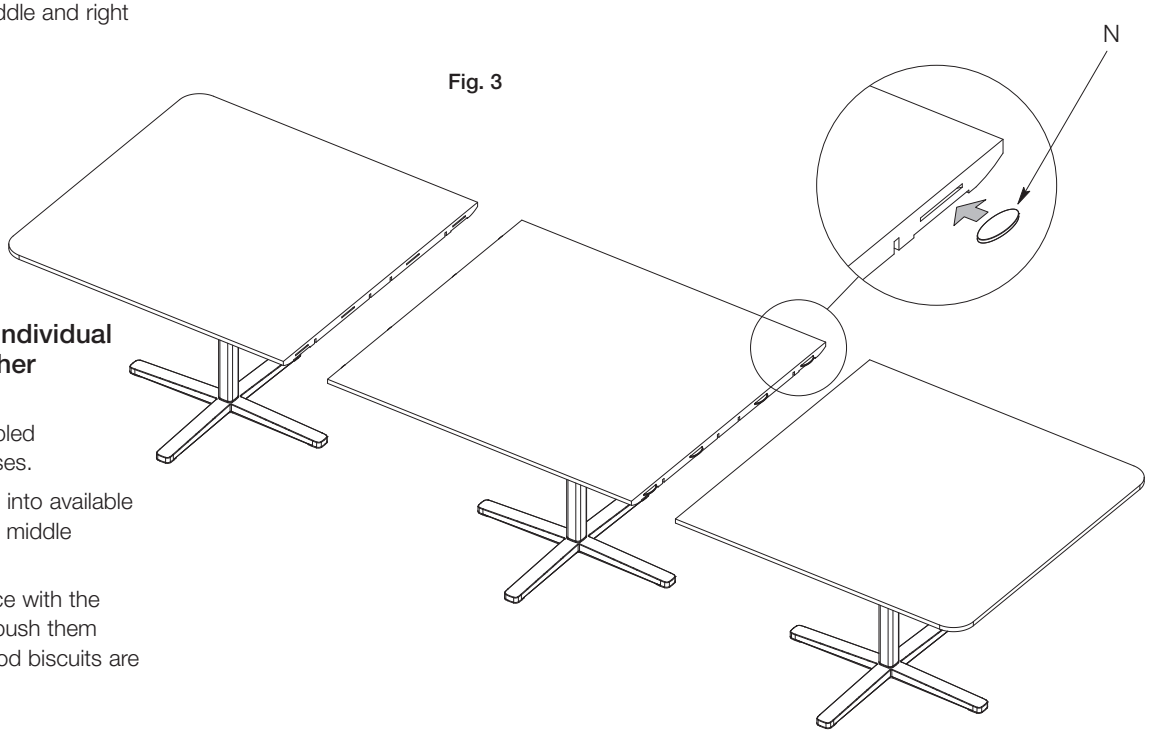


## 3. Assembly / Joining Individual Worksurfaces Together

(see Fig. 3)

3.1 Flip all individually assembled worksurfaces on their bases.

3.2 Insert 8 wood biscuits (N) into available slots on the both sides of middle worksurface (see Fig. 3).

3.3 Align left hand worksurface with the middle worksurface and push them together ensuring the wood biscuits are aligning.

# X-Base Conference Table Assembly - Multi-Piece Top

*Reference Number: 6TD00033*

**Fig. 4**
Underneath View

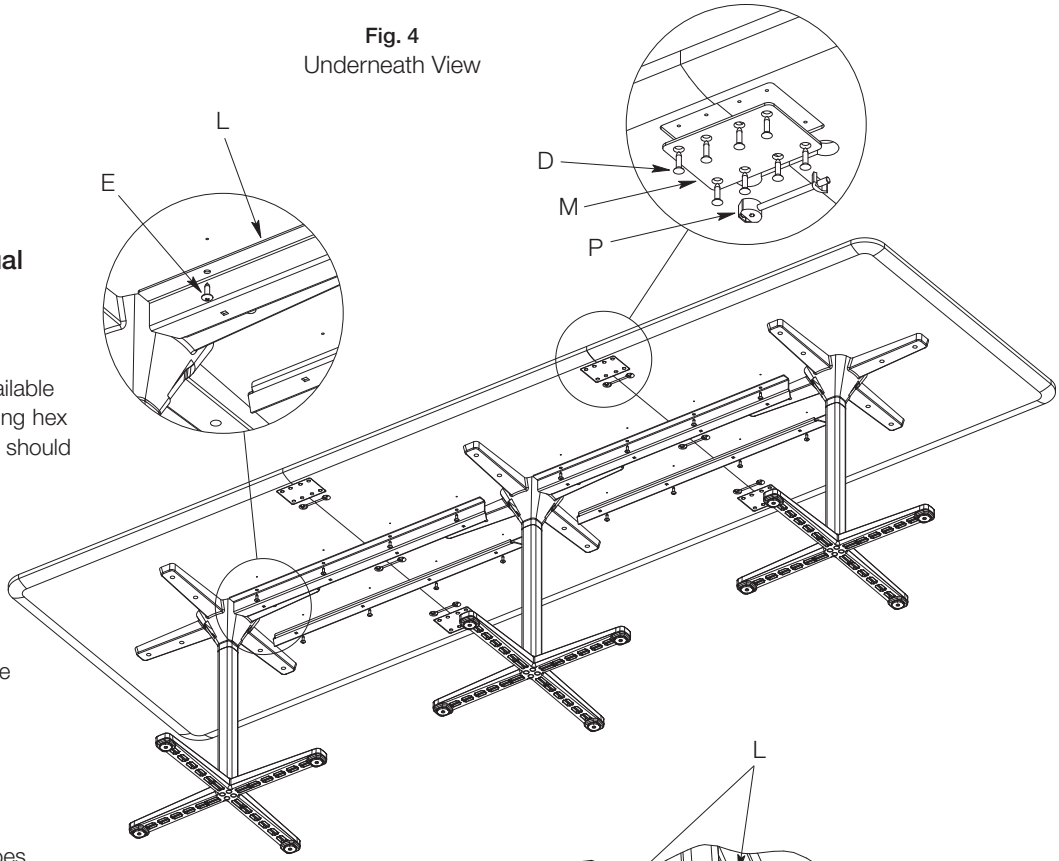


**3. Assembly / Joining Individual Worksurfaces Together (cont.)**
(see Fig. 4, Fig. 5)

3.4 Insert 4 zip bolts, item (M), into available slots, as per Fig. 4, and tighten using hex key. Make sure top of worksurface should be flush and aligned.

3.5 Center and align 2 mend plates, item (P), into available routed areas. Attach each plate to the worksurface using 8 (D) screws. (see Fig. 4)

3.6 Repeat steps 3.3, 3.4, & 3.5 for the right hand worksurface.

3.7 Orient stiffeners (L) as per Fig. 5.

**Note:** Open end of stiffeners (L) goes toward middle of worksurface.

3.8 Center the stiffeners over the provided pilot holes, attach each stiffener (L) to the worksurface using (E) screws. Screw (E) quantity will vary depending on stiffener (L) size. Use all provided pilot holes.

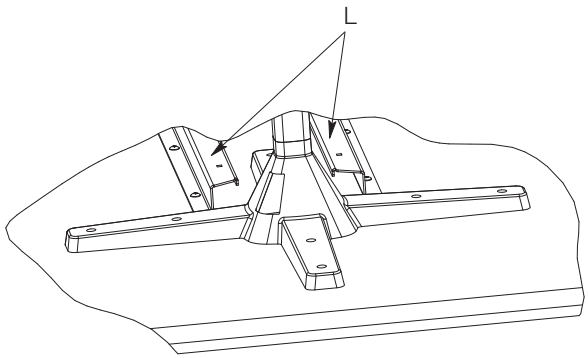


**Fig. 5**
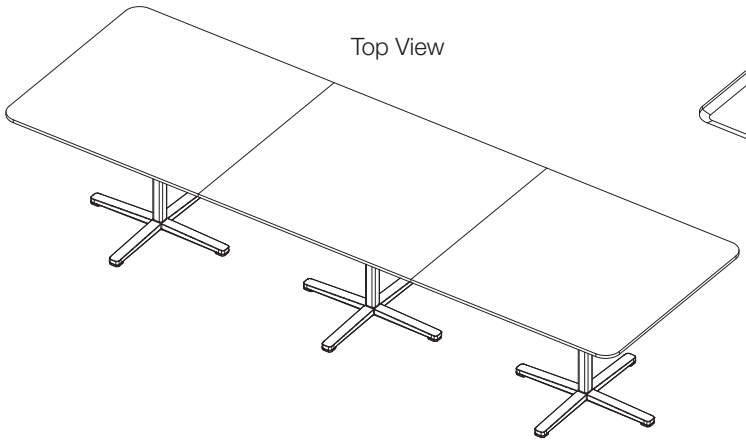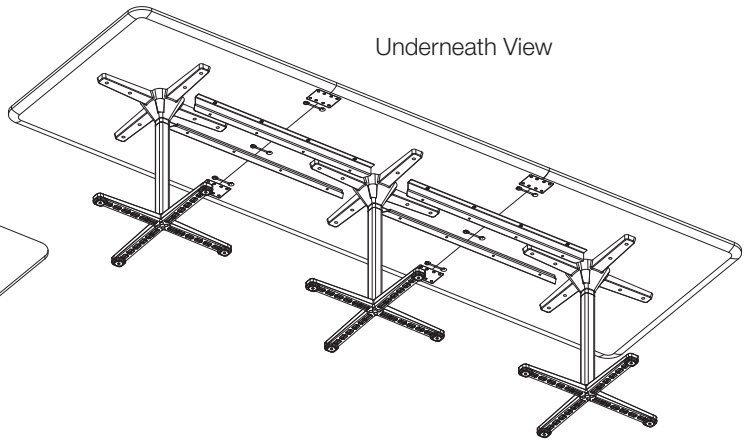
Complete Assembly