GLOSTER

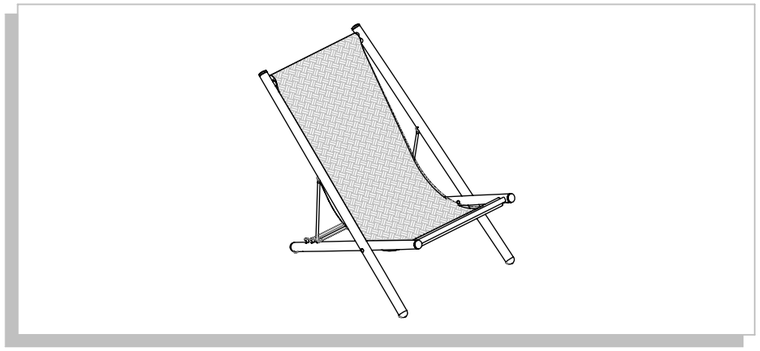

9320

Voyager Deck Chair

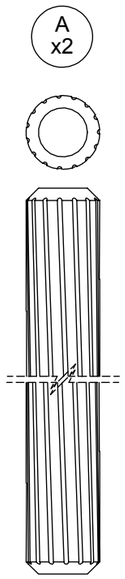

1

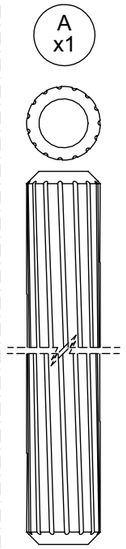

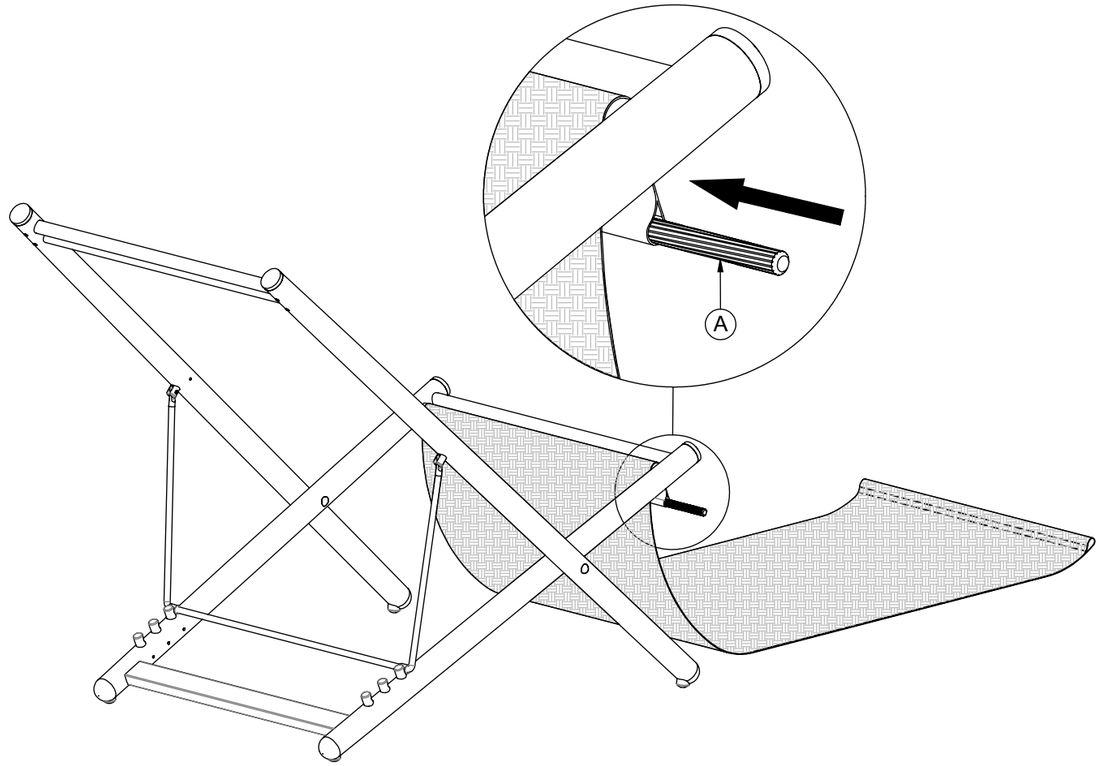

2

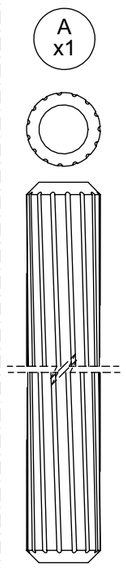

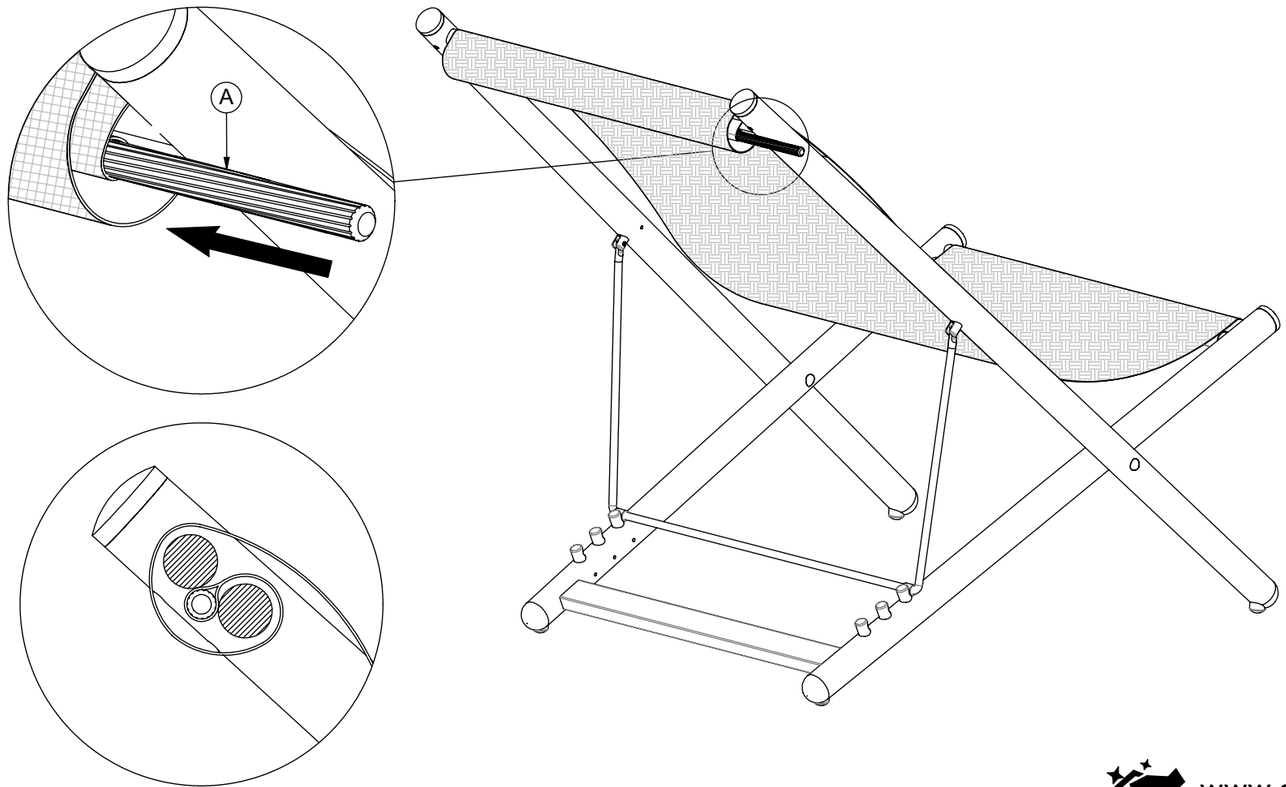

www.gloster.com